Technical data sheet

Product features

Cooking range solid top gas with static electric oven GN 2/1 - 3x burner 400 V / 3N		
Model	**SAP Code**	00018742
STPT 70/80 21 GE	**A group of articles - web**	Stoves



- Device type: Combined unit
- Ignition: Piezo+večný plamen
- Protection of controls: IPX4
- Material: Stainless steel

SAP Code	00018742	**Loading**	400 V / 3N - 50 Hz
Net Width [mm]	800	**Power gas [kW]**	25.400
Net Depth [mm]	700	**Type of gas**	Natural gas, propane butane
Net Height [mm]	900	**Width of internal part [mm]**	657
Net Weight [kg]	135.00	**Depth of internal part [mm]**	558
Power electric [kW]	6.300	**Height of internal part [mm]**	335

RM GASTRO, s.r.o.,
Třída Čs. armády 816,
391 81 Veselí nad Lužnicí 1, ID:49825062

Technical data sheet

Technical drawing

Cooking range solid top gas with static electric oven GN 2/1 - 3x burner 400 V / 3N		
Model	**SAP Code**	00018742
STPT 70/80 21 GE	**A group of articles - web**	Stoves

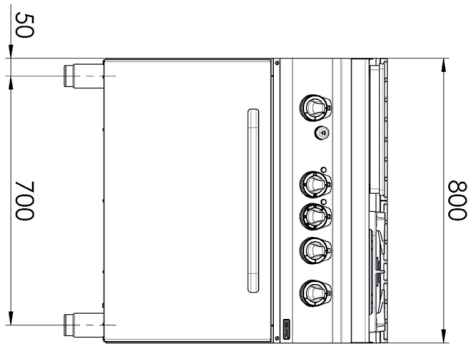

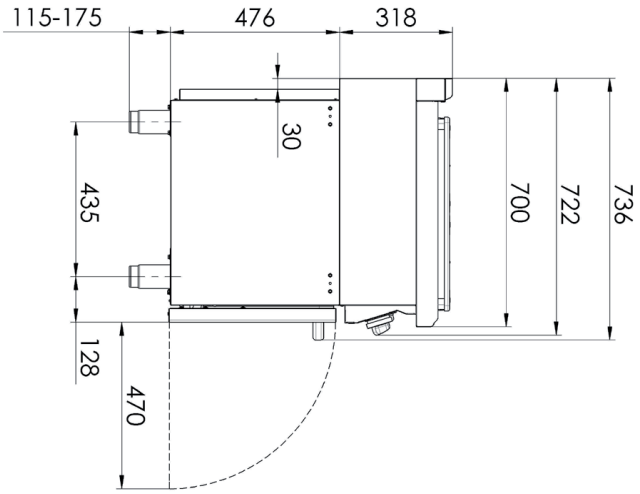

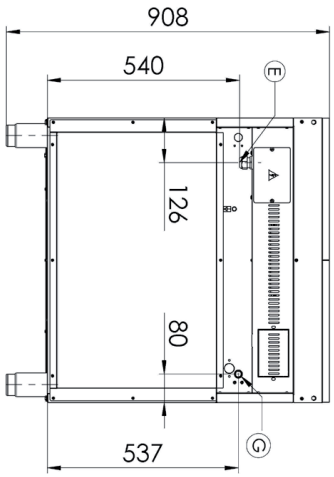

RM GASTRO, s.r.o.,
Třída Čs. armády 816,
391 81 Veselí nad Lužnicí 1, ID:49825062

Technical data sheet

Technical parameters

Cooking range solid top gas with static electric oven GN 2/1 - 3x burner 400 V / 3N		
Model	**SAP Code**	00018742
STPT 70/80 21 GE	**A group of articles - web**	Stoves

1. **SAP Code:**
   00018742
2. **Net Width [mm]:**
   800
3. **Net Depth [mm]:**
   700
4. **Net Height [mm]:**
   900
5. **Net Weight [kg]:**
   135.00
6. **Gross Width [mm]:**
   840
7. **Gross depth [mm]:**
   800
8. **Gross Height [mm]:**
   975
9. **Gross Weight [kg]:**
   135.00
10. **Device type:**
    Combined unit
11. **Construction type of device:**
    With substructure
12. **Power electric [kW]:**
    6.300
13. **Loading:**
    400 V / 3N - 50 Hz
14. **Power gas [kW]:**
    25.400
15. **Ignition:**
    Piezo+večný plamen
16. **Type of gas:**
    Natural gas, propane butane
17. **Protection of controls:**
    IPX4
18. **Material:**
    Stainless steel
19. **Indicators:**
    operation and warm-up
20. **Worktop material:**
    AISI 304
21. **Worktop Thickness [mm]:**
    1.20
22. **Number of power control stages:**
    6
23. **Safety thermocouple:**
    Yes
24. **Safety thermostat:**
    Yes
25. **Safety thermostat up to x ° C:**
    360
26. **Number of burners/hot plates:**
    3
27. **Type of gas cooking zones:**
    Fire protection to install + Classic burners
28. **Burner type:**
    Brass, detachable

RM GASTRO, s.r.o.,
Třída Čs. armády 816,
391 81 Veselí nad Lužnicí 1, ID:49825062

Technical data sheet

Technical parameters

Cooking range solid top gas with static electric oven GN 2/1 - 3x burner 400 V / 3N		
Model	**SAP Code**	00018742
STPT 70/80 21 GE	**A group of articles - web**	Stoves

29. Oven Type:
electrical static

30. Oven size:
GN 2/1

31. Oven material:
Stainless steel

32. Width of internal part [mm]:
657

33. Depth of internal part [mm]:
558

34. Height of internal part [mm]:
335

35. Maximum temperature of the inner chamber [°C]:
300

36. Minimum temperature of the inner chamber [°C]:
50

37. Connection to a ball valve:
1/2

RM GASTRO, s.r.o.,
Třída Čs. armády 816,
391 81 Veselí nad Lužnicí 1, ID:49825062